Drill King International

HADK-T112

AIR HAMMER (IR112)



Key features

- Robust IR/DHD 112 Shank Design
- Standard bit diameter Range : 11-7/8"-17 1/2" / 302 - 445mm
- High frequency design for fastest penetration rates
- Repair & Rebuild kits available for easy and cost effective maintenance

TECHNICAL BROCHURE

Parts List (IR 112)

NO	Part Name	Qty	Part Number
1	Top Sub	1	HPDK-T14001
2	Wear Washer	2	HPDK-T14004
3	Top Sub O-Ring	1	HPDK-T14003
4	Spring	1	HPDK-T14006
5	Check Valve	1	HPDK-T14007
6	C.V. Spring	1	HPDK-T14009
7	Choke Set	1	HPDK-T14008
8	Air Distributor	1	HPDK-T14010
9	Air Dis. O-Ring	1	HPDK-T14011
10	Cylinder	1	HPDK-T14012
11	Cyl Ret Ring	1	HPDK-T14013
12	Piston	1	HPDK-T14014
13	Wear Sleeve	1	HPDK-T14001
14	Piston Ret. Ring	1	HPDK-T14017
15	Bearing	1	HPDK-T14020
16	Snap Ring	1	HPDK-T14021
17	Bit Ret.Ring	1	HPDK-T14018
18	Bit Ret.Ring O-Ring	1	HPDK-T14019
19	Drive Sub	1	HPDK-T14022
	Sealkit (Items 3, 9, 18)		HPDK-T112SEALKIT
	Complete Hammer		**HADK-T112**

Dimensions & Weights

Top Sub Connection	6 ⅝" API REG PIN
Eff. Length (in / mm)	71.38 / 1813
OD (in / mm)	10.8 / 225
Hammer Weight (lbs / Kg)	1433 / 650
Piston Weight (lbs / Kg)	215 / 98

Drilling Parameters

Working Pressure (PSI / Bar)	150-250 / 10.3-24
Application Bit (in / mm)	11.88-17.5 / 302-445
Rotation Speed(RPM)	15 / 25
Assembly Make-Up Torque (lb·Ft / N·m)	12000 / 16272
Rotation Torque (lb·Ft / N·m)	6500 / 8814
Frequency (blows / min)	1200

Air Consumption

PSI	BAR	CFM	M^3/Min
150	10.3	880	25
200	13.9	1250	35
250	17.3	1700	48

Exploded view

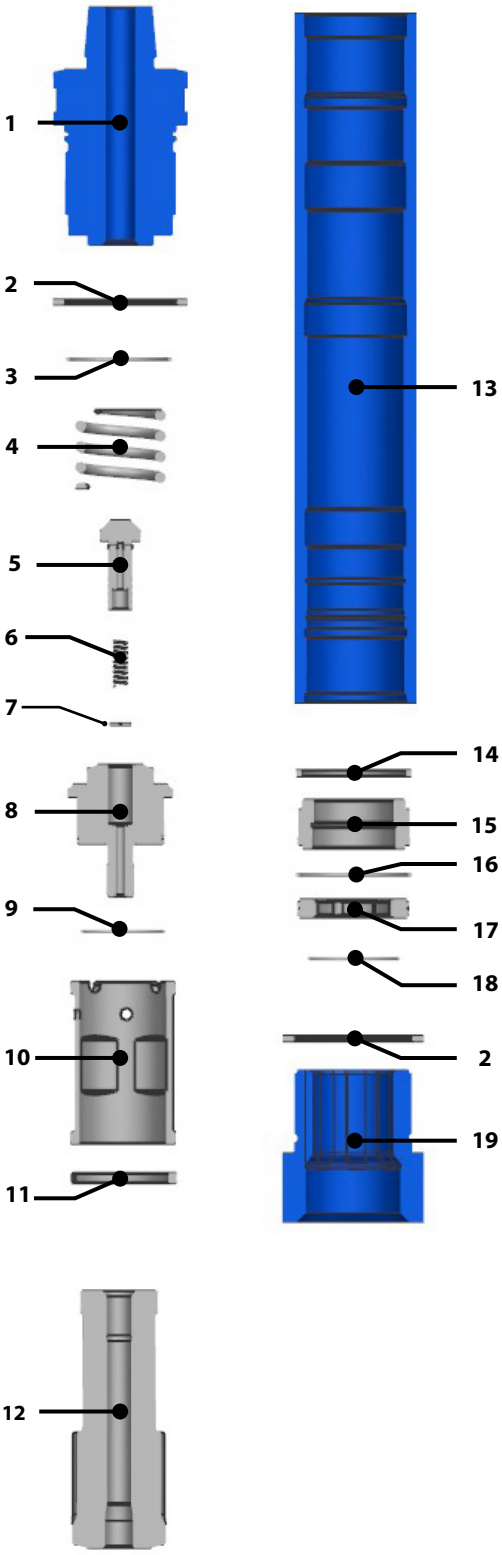

Note: Drilling Parameters given are guideline only

Drill King International

Phone: Global - **1.817.539.2500** or US/Canada - **1.866.900.2487**
Email: **sales@drillking.com** Web: **www.drillking.com**
Drill King International L.P. | 820 South 6th Avenue, Mansfield, TX 76063, USA