Drill King International

HADK-A800S

AIR HAMMER (SD8)

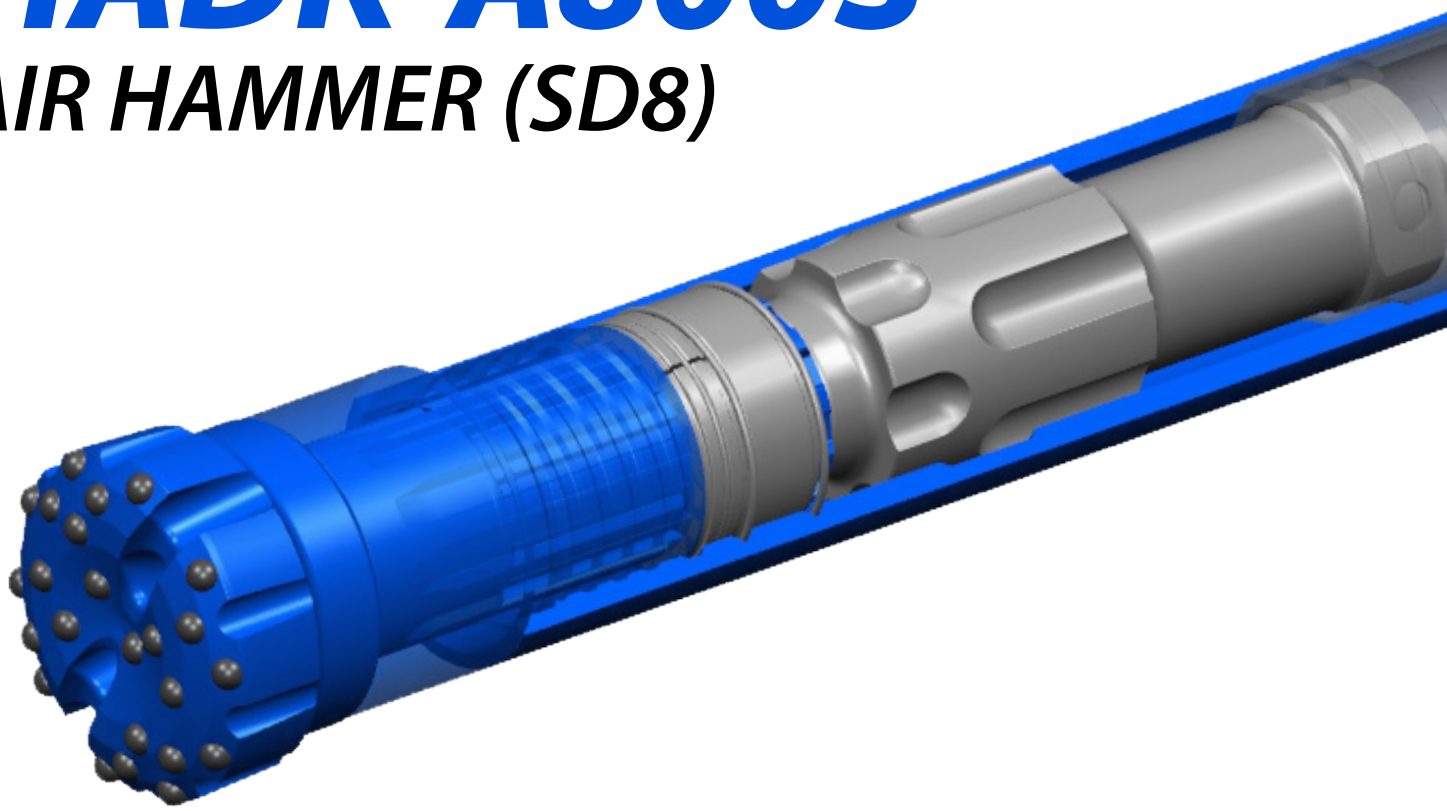

Key features

- Repair & Rebuild kits available for easy and cost effective maintenance
- High frequency design for fastest penetration rates
- Available for other common bits shanks IR and QL
- Customizable options for open hole or cased hole projects

TECHNICAL BROCHURE

Parts List (SD8)

NO	Part Name	Qty	Part Number
1	Top Sub	1	HPDK-A8002
2	Top Sub O-Ring	1	See Sealkit
3	Check Valve	1	HPDK-A8007
4	C.V. Spring	1	HPDK-A8009
5	Choke Set	1	HPDK-A8008
6	Press Ring	1	HPDK-A8023
7	Make Up Ring	1	HPDK-A8006
8	Air Distributor	1	HPDK-A8010-LYT-WGT
9	Air Dis O-Ring	1	See Sealkit
10	Cylinder	1	HPDK-A8012
11	Piston	1	HPDK-A8014-S-LYT-WGT
12	Wear Sleeve	1	HPDK-A8001-S
13	Snap Ring	1	HPDK-A8021
14	Bit Ret Ring	1	HPDK-A8018-S
15	Bit Ret Ring O-Ring	1	See Sealkit
16	Bit Bearing	1	HPDK-A8020-S
17	Drive Sub	1	HPDK-A8022-S
	Sealkit (Items 2, 9, 15)		HPDK-A80SEALKIT
	Complete Hammer		**HADK-A800S**

Exploded view

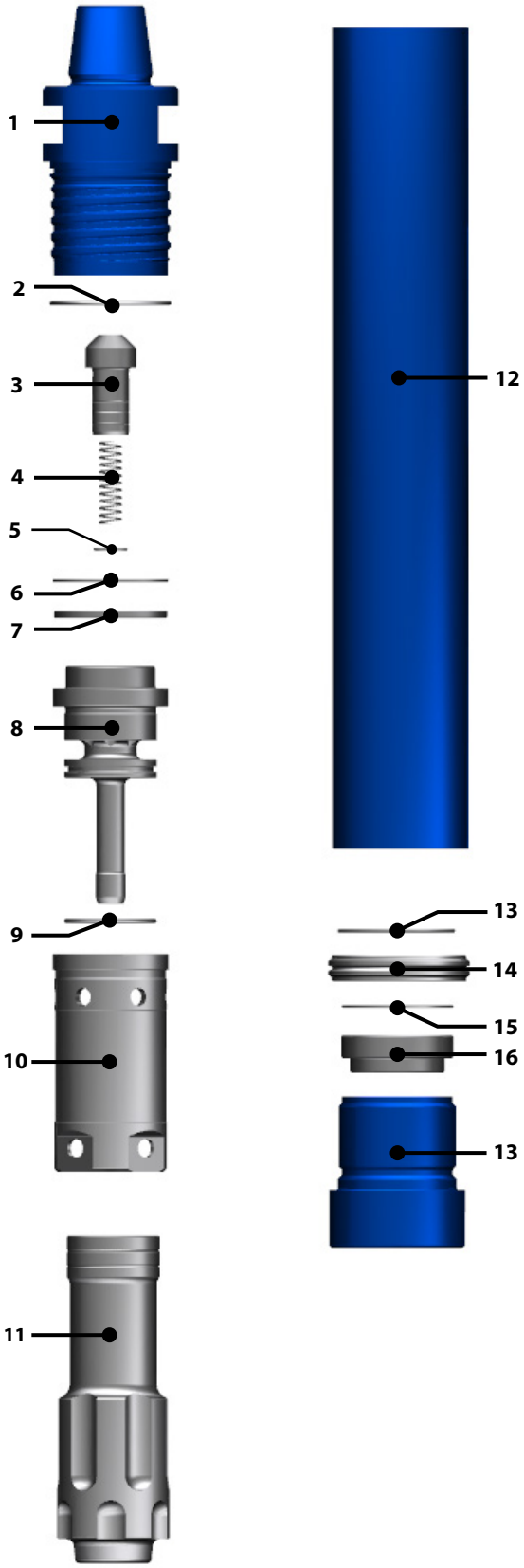

Dimensions & Weights	
Top Sub Connection	4 1/2" API REG PIN
Eff. Length (in / mm)	50.37 / 1279
OD (in / mm)	7.16 / 182
Hammer Weight (lbs / Kg)	405 / 184
Piston Weight (lbs / Kg)	84 / 38.1

Drilling Parameters	
Working Pressure (PSI / Bar)	150-350 / 10.3-24
Application Bit (in / mm)	7.87-10.63 / 200-270
Rotation Speed (RPM)	10-30
Assembly Make-Up Torque (lb·Ft / N·m)	7000 / 9492
Rotation Torque (lb·Ft / N·m)	1750 / 2373
Frequency (blows / min)	1310

Air Consumption

PSI	BAR	CFM	M^3/Min
150	10.3	496	14.08
250	17.2	820	23.2
350	24.1	1264	35.76

Note: Drilling Parameters given are guideline only

Drill King International

Phone: Global - **1.817.539.2500** or US/Canada - **1.866.900.2487**
Email: **sales@drillking.com** Web: **www.drillking.com**
Drill King International L.P. | 820 South 6th Avenue, Mansfield, TX 76063, USA