Drill King International

HADK-150
AIR HAMMER (SD15)



Key features

- Robust SD15 Shank Design
- Standard bit diameters, 17" - 22" / 457 - 559mm
- High frequency design for fastest penetration rates
- Repair & Rebuild kits available for easy and cost effective maintenance

TECHNICAL BROCHURE

Parts List (SD15)

NO	Name	QTY	Part Number
1	Top Sub	1	HPDK15002
2	Wear Spacer (Top / Bottom)	2	HPDK15004
3	Top Sub O-Ring	1	See Sealkit
4	Cheak Valve	1	HPDK15007
5	C.V. Spring	1	HPDK15009
6	Choke Set	1	HPDK15008
7	Spring Washer	1	HPDK15005
8	Makeup Ring	1	HPDK15006
9	Air Distributor	1	HPDK15010
10	Air Dis O-Ring	1	See Sealkit
11	Cylinder	1	HPDK15012
12	Piston	1	HPDK15014
13	Wear Sleeve	1	HPDK15001
14	Piston Ret. Ring	1	HPDK15017
15	Snap Ring	1	HPDK15021
16	Bit Ret Ring	1	HPDK15018
17	Bit Ret O-Ring	1	See Sealkit
18	Bearing	1	HPDK15020
19	Chuck	1	HPDK15022
	Sealkit (Items 3, 10, 17)		HPDK150SEALKIT
	Complete Hammer		**HADK150**

Dimensions & Weights

Top Sub Connection	8 5/8" API REG PIN
Eff. Length (in / mm)	74.10 / 1882
OD (in / mm)	14.8 / 376
Hammer Weight (lbs / Kg)	2769 / 1256
Piston Weight (lbs / Kg)	528 / 240

Drilling Parameters

Working Pressure (PSI / Bar)	150-250 / 10.3-17.2
Application Bit (in / mm)	17-20 / 432-508
Rotation Speed (RPM)	5-15
Assembly Make-Up Torque (lb·Ft / N·m)	20000 / 27120
Rotation Torque (lb·Ft / N·m)	10000 / 13560
Frequency (blows / min)	1140

Air Consumption

PSI	BAR	CFM	M3/Min
100	6.8	1050	30
150	10.3	1350	38
250	17.3	2500	71

Exploded view

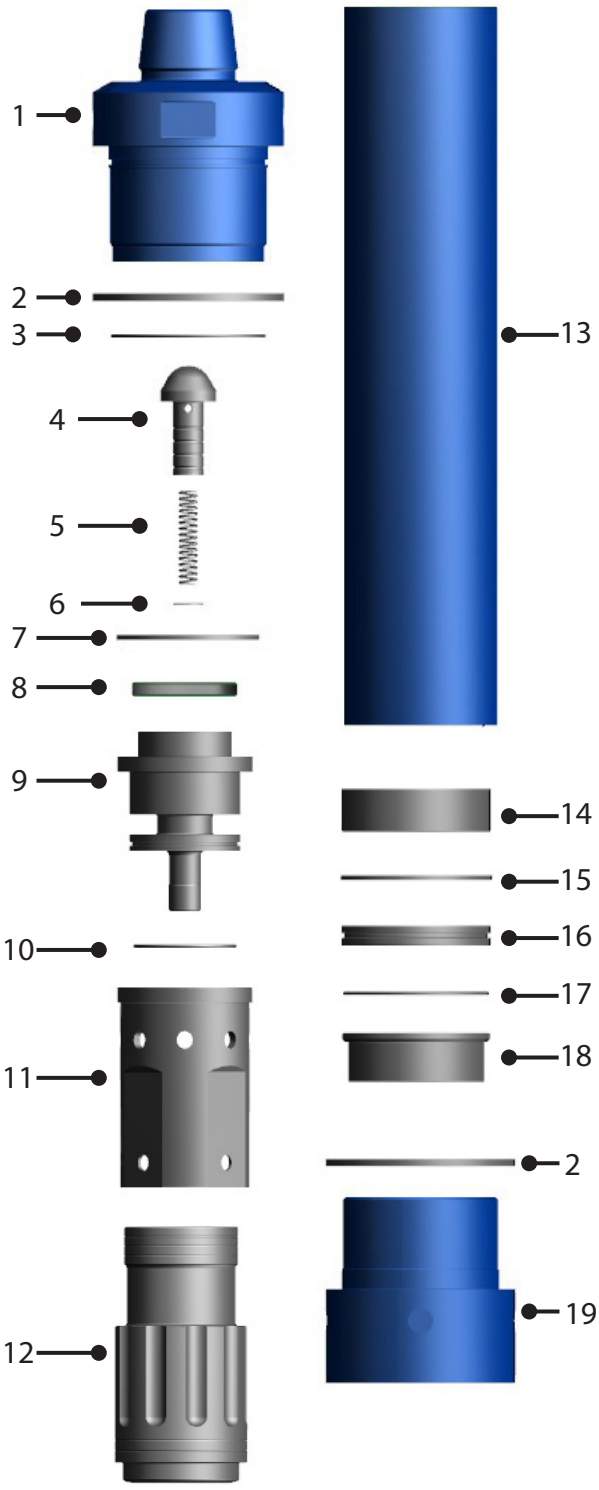

Note: Drilling Parameters given are guideline only

Phone: Global - **1.817.539.2500** or US/Canada - **1.866.900.2487**
Email: **sales@drillking.com** Web: **www.drillking.com**
Drill King International L.P. | 820 South 6th Avenue, Mansfield, TX 76063, USA