Drill King International

DK 150 Hammer Series

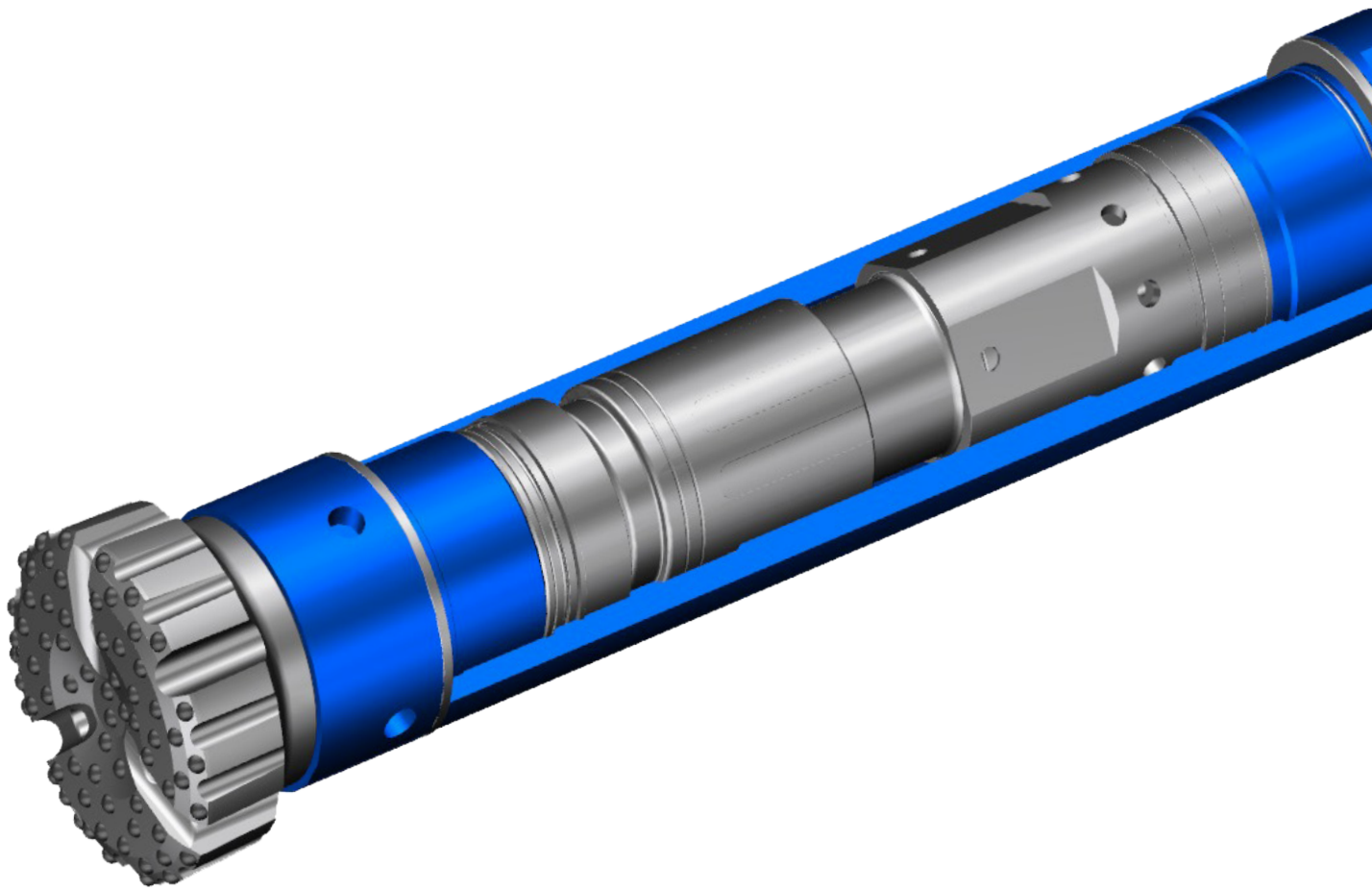

Technical Manual

820 South Sixth Ave
Mansfield, Tx 76063, USA.
Web: drillking.com / Email: sales@drillking.com

Table of Content

Introduction 2

DK 150 Hammer Introduction 3

Safety Recommendation & Precautions 4

Hammer View and Parts List 6

- DK150 6
- Clamping Locations 7

DK 150 Hammer Air Consumption at Different Working Pressure 8

Technical Specifications 8

Technical Summary 9

DK 150 Hammer Assembly 10

DK 150 Hammer Disassembly 10

DK 150 Hammer Inspection 11

Lubrication 12

Storage 13

Warranty 13

Introduction

Drill King International was founded back in 2004 by Randy Broseh in Arlington, Texas. A year later, the business turned into a real family affair when brother Larry Broseh acquired the business. The brothers used their extensive industry knowledge to create a unique company with the best customer service in mind.

Continued growth and customer demand saw Drill King in 2008 decide to build a 60,000 sq.ft (5,575 sq.m) facility in Mansfield Texas. From this point the company has gone from strength to strength creating innovative drilling tolls and solutions for a variety of customer projects around the globe.



DK 150 Hammer Introduction

The DK Hammer Series is designed to operate efficiently on air pressure. Compressed air is directed to the hammer via the rotation spindle and drill pipe. Exhaust air from the hammer is passed through blowholes in the drill bit and is used to flush clean the drilled hole. Rotation is provided by a rotation unit on the drill rig and transferred to the hammer via the drill pipe.

The drill pipe is threaded so that the drill string can be extended as drilling advances and the hole becomes deeper. Feed force is also transmitted to the hammer via the hole down unit and the weight of the drill pipe.

The Drill King Hammer Line is designed to allow the wear sleeve to be manufactured with increased wall thickness, thus extending the service life. The wear sleeve may also be reversed during operation, thus further extending its life by as much as 200%

The DK Hammer Series was developed after much research by utilizing the newest technologies available. The DK Hammer Series is designed to be used in a wide range of application in rock conditions.

- Innovative & simple design for easy eco kit maintenance
- High frequency design for fastest penetration rates
- Customizable options for open hole or cased hole projects
- Premium alloys & treatment used for longer lasting tools

Safety Recommendation & Precautions

The safety Recommendations listed below are intended to alert the hammer operators and maintenance personnel to the possible physical dangers inherent in the various phases of operating and maintaining equipment of this kind.

We recommend that all operators and maintenance personnel read and thoroughly understand the safety precautions before attempting to operate or perform maintenance on the drilling equipment. We put "**SAFETY FIRST**" and suggest this must always be the primary consideration of all personnel while operating or maintaining the equipment.

Since the Safety Recommendations can't cover every potential situation, it is suggested that everyone exercises good judgernent and common sense while operating, servicing, or working near the equipment.

NOTE:
SAFETY STATEMENTS ARE INCLUDED THROUGHOUT THE MANUAL WHERE IT MAY APPLY SPECIFICALLY TO INDIVIDUAL COMPONENTS OR ASSEMBLIES. FAILURE TO COMPLY WITH SAFETY WARNING CAN RESULT IN SERIOUS OR FATAL INJURY. IMPROPER OPERATION AND MAINTENANCE CAN CASUE SEVERE EQUIPMENT DAMAGE OR EXCESSIVE WEAR ON THE HAMMER AND HAMMER BIT.

- ☑ Be equipped with appropriate attire, hard hat, gloves, safety shoes, eye and ear protection. Don't wear loose clothing that could get caught in the equipment.
- ☑ Safety goggles or safety glasses are required. Rocks, dust, and loose particles from drilling may be blown into the as during drilling. Also, use safety glasses when sharpening bits.
- ☑ Handle all equipment with care.
- ☑ Operating the hammer at extreme pressures or speeds may cause failure or excessive wear. Please follow the instructions in the technical manual and use the recommended procedures for operation and maintenance of the hammer.

☑ Compressed air or fluid used for cleaning purposes should be utilized with extreme caution:

- Do not apply directly to your skin
- Do not use for cleaning directly from your clothing
- Do not direct it at another person
- Be careful not to blow directly into the equipment
- Wear safety glasses **AT ALL TIMES** of the operation

☑ Check the drill rod to power head spindle joint and make sure it is securely tightened before running the rotary head in reverse rotation. If you have a loose connection, it could result in the drill rod becoming disconnected cornpletely. If the drilling rod becomes disconnected, it could strike personnel.

☑ Be cautious about getting under the downhole hammer for inspedion. The downhole hammer could unexpectedly cycle, forcing the piston to drop out of the downhole hammer. This could cause bodily injury to anyone under the downhole hammer.

☑ When using solvents to clean parts, make sure that they are nonflammable, and that it meets current OSHA and International Standards; be sure to use the solvent in a well-ventilated area.

☑ Be sure all downhole hammer components are properly lubricated and maintained, while in storage. Failure to follow lubrication recommendations could cause damage and wear to the downhole hammer, its components, and /or personnel injury.

☑ Never heat up any parts of the hammer or weld on it. Use extreme care when breaking loose the top and bottom connections, using either a spanner wrench or a flat wrench that properly fits the driver and top sub.

Parts List (SD15)

NO	Name	QTY	Part Number
1	Top Sub	1	HPDK15002
2	Wear Spacer (Top / Bottom)	2	HPDK15004
3	Top Sub O-Ring	1	See Sealkit
4	Cheak Valve	1	HPDK15007
5	C.V. Spring	1	HPDK15009
6	Choke Set	1	HPDK15008
7	Spring Washer	1	HPDK15005
8	Makeup Ring	1	HPDK15006
9	Air Distributor	1	HPDK15010
10	Air Dis. O-Ring	1	See Sealkit
11	Cylinder	1	HPDK15012
12	Piston	1	HPDK15014
13	Wear Sleeve	1	HPDK15001
14	Piston Ret. Ring	1	HPDK15017
15	Snap Ring	1	HPDK15021
16	Bit Ret. Ring	1	HPDK15018
17	Bit Ret. O Ring	1	See Sealkit
18	Bearing	1	HPDK15020
19	Chuck	1	HPDK15022
	Sealkit (Items 3, 10, 17)	1	HPDK150SEALKIT
	Complete Hammer		HADK150

Dimensions & Weights

Top Sub Connection	8 5/8" API REG PIN
Eff. Length (in / mm)	74.10 / 1882
OD (in / mm)	14.8 / 376
Hammer Weight (lbs / Kg)	2769 / 1256
Piston Weight (lbs / Kg)	528 / 240

Drilling Parameters

Working Pressure (PSI / Bar)	150-250 / 10.3-17.2
Application Bit (in / mm)	17-20 / 432-508
Rotation Speed (RPM)	5-15
Assembly Make-Up Torque (lb·Ft / N·m)	20000 / 27120
Rotation Torque (lb·Ft / N·m)	10000 / 13560
Frequency (blows / min)	1140

Air Consumption

PSI	BAR	CFM	M3/Min
100	6.8	1050	30
150	10.3	1350	38
250	17.3	2500	71

Exploded view

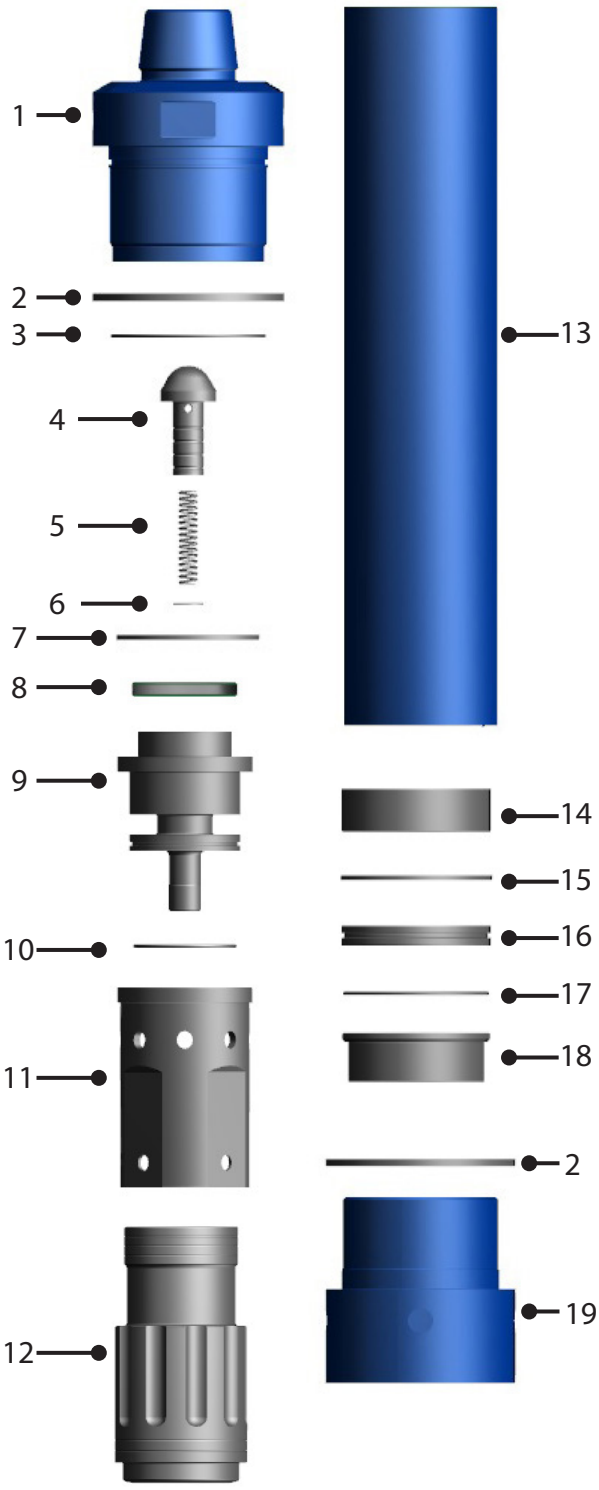

Note: Drilling Parameters given are guideline only

Phone: Global - **1.817.539.2500** or US/Canada - **1.866.900.2487**
Email: **sales@drillking.com** Web: **www.drillking.com**
Drill King International L.P. | 820 South 6th Avenue, Mansfield, TX 76063, USA

Clamping Locations

HAMMER	LOCATION FROM TOP SUB END OF WEAR SLEEVE "A"	LENGTH OF GRIP AREA "B"	LOCATION FROM DRIVER SUB END OF WEAR SLEEVE "C"	LENGTH OF GRIP AREA "D"
IR3.5	3	4	3	4
IR340	4	4	4	4
QL40	4	4	4	4
SD4	4	4	4	4
IR350	6	4	5	4
QL50	6	4	5	4
SD5	6	4	5	4
IR360	4.5	4	5	4
QL60	4.5	4	4.5	4
SD6	4.5	4	5.5	4
IR380	6.5	4	6	4
QL80	6.5	4	6	4
SD8	6.5	4	6	4
SD10	8	6	6.5	6
IR112	9.5	6	7	6
QL120	9.5	6	7.5	6
SD12	9.5	6	8	6
SD15	9.5	6	8.5	6

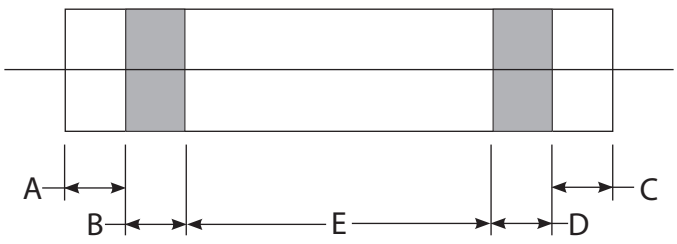

DO NOT USE TONGS
IN AREAS A, C AND E

DK 150 Hammer Air Consumption at Different Working Pressure

PSI	BAR	CFM	CuMtr/Min
100	6.9	1050	30
150	10.3	1350	38
200	13.9	1800	51
250	17.3	2500	71

In difficult drilling conditions, extra flushing can be obtained by changing the choke in the check valve. This might be desirable, e.g. when there is a large influx of water into the hole, when there is a big difference between the diameter of the drill bit and the diameter of the drill pipes, or when penetration rates are abnormally high.

Friction between the drill pipes and the hole wall can sometimes reduce the penetration rate. Increasing the air pressure to give more impact power and faster penetration can often counteract this.

Technical Specifications

Standards

- Bit Size- Minimum/Maximum 17" (432mm) – 20" (508mm)
- Feed Force - 6000-10000 (Ft/lbs) / 830-1383 (M-Kg)

Tolerances-Wear Limits

- Minimum Wear Sleeve Outer Diameter (OD) 14.25" / 361.95mm
- Maximum Clearance Piston to Wear Sleeve ID .019" / 0.482mm
- Maximum Clearance Piston to Guide .035" / 0.889mm

Operational-Minimums

- Torque: Roughly 500 ft-lb per inch of bit diameter Speed - 10 to 25 rpm
- Volume: 150-200 scfm per inch of hammer diameter / 21-28 Cu.Mtr per kg
- Operating pressure: 150-250 Lubrication: 1/3 pint per hour per 100 scfm
- Hold down force: 500 lb per inch of hammer diameter / 35 kgF cm squared
- Hold back force: Must be capable of maintaining 500 lb per inch at depth (make sure to factor hole depth and string weight).

Technical Summary

The DK Hammer is equipped with a non-ported reversible steel wear sleeve; ranging from 2"-18" in diameter, the wearsleeve (case), which houses all the components in the parts list (as seen in the schematic). The back end of the wearsleeve is closed by a threaded top sub. The top sub has an API thread for connection to the drill string, and has wrench flats milled on the sides. The choke, which is interchangeable, is located in the check valve. In order to change the choke out, you would need to pull the top sub; between it and the back head, is the check valve. The check valve maintains pressure in the hammer when the air supply is shut off. This prevents water or debris from entering the hammer through the drive sub. The splined union between the drive sub and bit shank transmits rotation to the drill bit. The front end of the driver sub transmits feed force to the drill bit. The snap ring and bit retaining rings ensures proper position of internal moving parts and prevents the piston from falling out when attached to the drill string, in position for drilling.

When feed force is applied, the drill bit is pushed into the hammer and pressed against the front of the drive sub. The impact piston strikes the shank of the drill bit directly. The passage of compressed air through the hammer is directed by the piston. A built in dampening chamber cushions the piston return stroke and increases the impact frequency.

After the compressed air has imparted most of its pressure energy to the piston, it is led as exhaust air through the foot valve into the central gallery in the drill bit. The exhaust air passes through the inner diameter of the bit and emerges as flushing air through holes in the drill bit head. This gives efficient transportation of cuttings out of the drill hole.

When the hammer is lifted off the bottom of the hole, the piston drops into the air blowing position. This disengages percussion action and gives air blowing only, i.e. a large volume of air flows straight through the hammer and drill bit. During drilling, air blowing starts if the drill bit loses contact with the bottom of the hole. The hammer starts operating again as soon as the bit is pressed back against the drive sub. Air blowing is used when powerful flushing of the drill hole is required, and in certain difficult drilling conditions.

In difficult drilling conditions, extra flushing can be obtained by changing the choke in the check valve. This might be desirable, e.g. when there is a large influx of water into the hole, when there is a big difference between the diameter of the drill bit and the diameter of the drill pipes, or when penetration rates are abnormally high. It is important to increase your lubrication when there is an increase of water (see Lubrication section for details).

DK 150 Hammer Assembly

- Lubricate parts well with rock drill oil prior to assembly.
- Hold wearsleeve tightly in a chain vise. Never place chain wrench over the threads.
- Reinstall the piston-retaining ring (if removed) in wear sleeve until it locks into place.
- Before replacing the drive sub onto the bit and securing the bit retaining rings a the back of the drive sub, lubricate the chuck splines with a zinc-base to joint lubricant. Then reinstall the O-ring over the bit retainer ring.
- Lubricate the drive sub shoulder and threads.
- Reinstall the drive sub and bit combination into the wearsleeve. Screw it into the end of the wearsleeve firmly. Complete assembly by tightening with the bit-detaching wrench to the proper torque.
- Push piston all the way through its stroke from the back head end of wear sleeve.
- Replace O-ring in the air distributor if necessary.
- Reinstall disc springs in their original series. Make sure that they are in the correct series. If bevels do not face each other, you may do considerable damage to the hammer.
- Reinstall springs on air distributor.
- Reinstall washer while holding springs in place.
- If during disassembly the need for a wear spacer is discovered, install one.
- Push the stem end of air distributor into the cylinder until the air distributor shoulders against the cylinder.
- Reinstall air restriction plug at the 3/8" or 9.5mm diameter port in the check valve. This is only necessary if the choke was damaged and replaced or a different choke is desired. Install the different choke into the check valve with the flat end toward the valve spring.
- Reinstall check valve plunger and check valve spring in the air distributor.
- Install new O-ring into top sub, if a new one is necessary.
- Lubricate top sub threads and shoulder.
- Reinstall top sub into wear sleeve. Tighten with a spanner wrench.

DK 150 Hammer Disassembly

- Take drive sub breakout ring, bit and bit retaining ring off of the wearsleeve. Note: If possible try to break loose the backhead and chuck prior to taking off the rig, it is much easier than trying to do so after it has been taken down.
- Take O-ring and bit retaining ring off of the bit shank and remove drive sub from bit
- Use snap ring pliers to take the snap ring out of the drive sub end of the hammer.
- Use spanner wrench to take the top sub out of the wearsleeve and take O-ring off of the top sub. If necessary, use tongs to loosen tight joint.

- Remove the check valve and spring from the air distributor. Only remove the air restriction plug if it needs to be replaced.
- Push washer, (wear spacer, if used), four disc springs, and air distributor out of the wear- sleeve by placing a small rod through the piston center hole and tap out. Replace the O-ring if necessary.
- Stick a larger brass drift rod into the drive sub end of the wear sleeve to push the piston. Be sure that the rod's O.D. is larger than the piston's center hole, so it does not go thru or get stuck in the hole.
- Remove the piston from the top end of the wearsleeve.
- Remove the bit bearing and "0" ring and inspect the "0" ring for nicks & cuts.
- Push piston back into the top sub end of the wearsleeve and use it to knock the piston retaining ring out the drive sub end, if the ring is damaged or needs to be replaced.

DK 150 Hammer Inspection

All components should be washed in a clean (environmentally safe) solvent before they are inspected for wear and reassembled. Inspect components as follows:

Backhead - threads and pin holes for cracks or burrs. If cracks are discovered, replace. If burrs are found, use a fine file to remove.
Check Valve - should be smooth and free from scarring (also check valve spring wear).

Snap Ring/Bit Bearing Ring/Coil Spring/Stop Ring - check for excessive wear, remove any sharp edges, replace if necessary.

Piston - check striking face for nicks, scoring, cracks, or micro cracks. Use an emery cloth to smooth out any imperfections. If cracks are found, replace.

Wear Sleeve (Case) - check OD for excessive wear or cracks; check ID for scoring. Use fine honing stones to remove imperfections. Clearance between the piston and wear sleeve is not to exceed .010.

Drive Sub - Inspect for cracks and burrs use same method as above to remove burrs. If cracks are found, replace. The OD should be larger than the outside of the wear sleeve or at least the same diameter.

O Ring - check for deformations or cracks, replace if necessary.

Remember to handle all components with care, if dropped, chips or micro cracks can occur in hardened parts creating stress risers; this can drastically shorten the life of the tool and cause breakage while down the hole.

Lubrication

In order to maintain satisfactory operation of the Drill King Hammers, you must lubricate the hammer properly. The recommended lubricant to use with Drill King Hammers is the Biodegradable and Environmentally Friendly **Rock Drill Oil (Part Number DKRDO-5G).**

- Check the oil level in the lubricating tank
- Check for oil in the compressed air.
- Mineral oils have the best lubricating properties
- Lubricating out used in water well drilling should be non-toxic.

You can make sure the lubricant is being carried to the hammer via the compressed at by placing a plank over the drill steel support and letting the operating air blow over the plank. If you see that it is oily then the oil should be getting to the hammer. It is also essential to the life of the hammer components.

Proper thread lubricants are also critical to the life of the hammer components. Thread lubrication applied to the stress relief grooves at the base pin will help fight the effects of corrosive drilling fluids.

As a general rule for dry drilling, which is less than 2gpm, it is recommended to inject 1/3 pint of oil per hour for every 100scfm of air. For wet drilling, which is more than 2gpm, the lubrication rate should be should be doubled to 2/3 pint per 100scfm. Example, dry drilling at 900scfm would require 3 pints of oil per hour (900/100 x 1/3 =3)

It is a necessary procedure to reapply thread lubricant (Drill King Copper Cote Part No. 630010 1-gal) to the driver sub threads when changing bits. It is also important that the drive sub and the top sub threads be recoated with thread lubricant often in order to assure the maximum protection from corrosion pitting.

Corrosion failures in percussion hammers and hammers bits can be controlled by maintaining a protective barrier between the bit and hammer parts and the environment through proper application of readily available rock drill oils and thread lubricants.

The best method for preventing failures due to corrosion fatigue is to be sure the surface of the bits and components of the hammer is coated with rock drill oil. Threaded connections and thread run out grooves should be protected by coating with thread lubricant. When using water injection, solvable rock drill oil with a higher viscosity rating should utilized.

Storage

When storing Drill Hammers, it is important to blow the hammer clear of all water. After disassembling the hammer, all internal parts are liberally coated with rock drill oil. Store the hammer horizontally in a clean dry place.

Warranty

NOTICE TO CUSTOMER: READ CAREFULLY, THESE TERMS AND CONDITIONS CONTAIN DISCLAIMERS OF WARRANTIES AND STRICT LIMITATIONS OF LIABILITIES AND REMEDIES. NO WARRANTY IS TRANSFERRABLE WITHOUT THE EXPRESS PERMISSION OF DRILL KING INTERNATIONAL.

Drill King International LP warrants to the original purchaser that its products are free from defects in material and workmanship for a period of:

- ☑ Percussion Bits — One year from the date of purchase.
- ☑ DTH Hammers — Six months from the date of purchase.
- ☑ WAI Hammers — Three months from the date of purchase.

Claims of defects in material and workmanship are subject to review and physical inspection of the returned product. Failure of the purchaser to provide relevant operational details to assist in the investigation will result in the denial of the claim. Until resolution, the purchaser must retain and appropriately store the claim. part. Upon request, the claimed part must be sent to Drill King for assessment. Any part or product sent to Drill King must be accompanied with a "Return Authorization Form" issued, in advance, by the Sales Department at Drill King. All return packaging must clearly be marked with the return authorization number. Freight for the return must be pre-paid by the purchaser. Failure to abide by these instructions will result in refusal to accept the returned product at the Drill King facility.

To begin a warranty claim a 'Product Evaluation Report' must be fully completed and submitted within the above mentioned time frame or warranty life

The report must be completed and submitted within (14) days of either the time of discovery of defect or when reasonable discovery of defect should have been made. Warranty Claims will only be accepted on products still within their warranty life.

Drill King International expressly excludes the following from the terms of this warranty:

- ☑ Incidental or consequential damages connected with the use of their products
- ☑ Claims of parts issued under concession.
- ☑ Claims of lost time
- ☑ Performance outside of the standard scope provided by Drill King International
- ☑ Effects of corrosion and/or normal wear
- ☑ Hammer seals and/or items intended to wear
- ☑ Any part that shows evidence of improper application
- ☑ Fitness for use other than the intended purposes of the product
- ☑ Proprietary design where the design control is retained by the customer, particularly when design parameters are outside Drill King Internationals recommended specifications (E.X. Oversized bits or hole openers.)
- ☑ Evidence of abuse, localized heating, welding, galling, corrosion, inadequate lubrication, physical alteration, wrench marks, lack of proper maintenance, operating outside recommended specifications, bending or otherwise distorting, excessive wear, improper storage or transportation, and chipped or crushed carbides must result in denial of claims
- ☑ Damage caused as a result of using incorrect servicing tools or procedures
- ☑ Evidence from wear shows the product has achieved at least 7596 of its expected life.
- ☑ Any part that is described as "No Warranty" in the quote, order acknowledgement, order, packing list, or invoice
- ☑ Special warranties described in the quote, order acknowledgement, order, packing list, or invoice

Conclusion

In the event of finding a defective product, a full or pro-rated credit will be issued provided that the end user has demonstrated that the product has been stored, installed, maintained and operated in an acceptable manner.

Drill King International will not accept any remedies to the user other than those set out under the provisions of the warranty above. **Drill King international will only ever be liable for damages that are liquidated and set at the original purchase price for any said item or part in dispute**

Drill King International

CONTACT US

Phone: 1-817-539-2500
Fax: 1-817-453-1263
Toll Free: 1-866-900-BITS (2487)
Email: sales@drillking.com
Skype ID: drill.king

Drill King International
820 S 6th Ave, Mansfield, TX 76063, USA.

drillking.com