Drill King International

DK 112 Hammer Series

IR 112, 112S & SD12

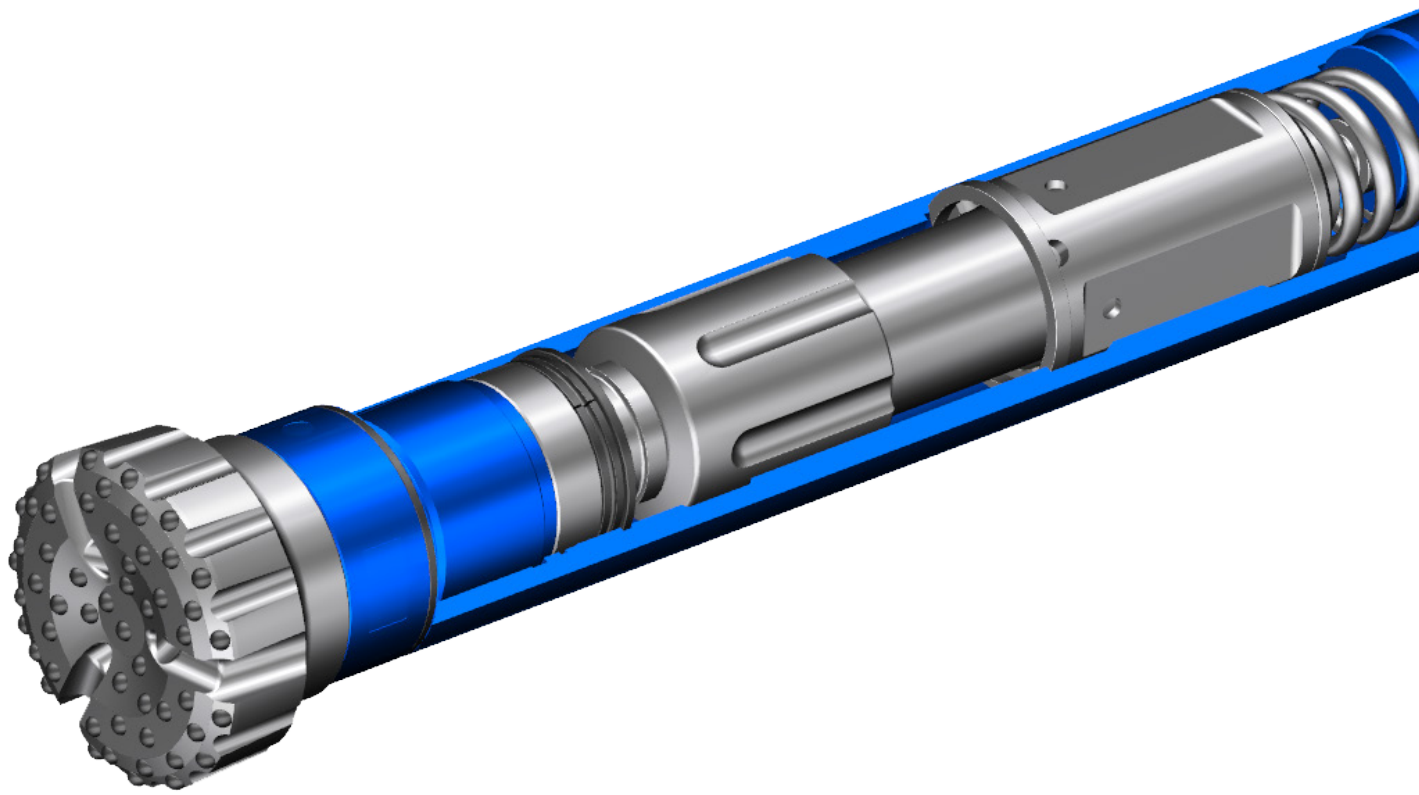

Technical Manual

820 South Sixth Ave
Mansfield, Tx 76063, USA.
Web: drillking.com / Email: sales@drillking.com

Table of Content

Introduction 2

DK 112 Hammer Introduction 3

Safety Recommendation & Precautions 4

Hammer View and Parts List 6

- Bit Shank IR 112 6
- Bit Shank IR 112S 7
- Bit Shank SD 12 8
- Clamping Locations 9

DK 112 Hammer Air Consumption at Different Working Pressure 10

DK 112 Hammer Assembly 10

Assembly with Shank type IR 112 11

- Assembly with Bit 15

Assembly with Shank type SD12 16

- Assembly with Bit 17

Lubrication 19

Storage 19

Warranty 20

Introduction

Drill King International was founded back in 2004 by Randy Broseh in Arlington, Texas. A year later, the business turned into a real family affair when brother Larry Broseh acquired the business. The brothers used their extensive industry knowledge to create a unique company with the best customer service in mind.

Continued growth and customer demand saw Drill King in 2008 decide to build a 60,000 sq.ft (5,575 sq.m) facility in Mansfield Texas. From this point the company has gone from strength to strength creating innovative drilling tolls and solutions for a variety of customer projects around the globe.



DK 112 Hammer Introduction

The DK Hammer Series is designed to operate efficiently on air pressure. Compressed air is directed to the hammer via the rotation spindle and drill pipe. Exhaust air from the hammer is passsed through blowholes in the drill bit and is used to flush clean the drilled hole. Rotation is provided by a rotation unit on the drill rig and transferred to the hammer via the drill pipe.

The drill pipe is threaded so that the drill string can be extended as drilling advances and the hole becomes deeper. Feed force is also transmitted to the hammer via the hole down unit and the weight of the drill pipe.

The DK Hammer Series was developed after much research by utilizing the newest technologies available. The DK Hammer Series is designed to be used in a wide range of application in rock conditions.

- Innovative & simple design for easy eco kit maintenance
- High frequency design for fastest penetration rates
- Customizable options for open hole or cased hole projects
- Premium alloys & treatment used for longer lasting tools

Safety Recommendation & Precautions

The safety Recommendations listed below are intended to alert the hammer operators and maintenance personnel to the possible physical dangers inherent in the various phases of operating and maintaining equipment of this kind.

We recommend that all operators and maintenance personnel read and thoroughly understand the safety precautions before attempting to operate or perform maintenance on the drilling equipment. We put "**SAFETY FIRST**" and suggest this must always be the primary consideration of all personnel while operating or maintaining the equipment.

Since the Safety Recommendations can't cover every potential situation, it is suggested that everyone exercises good judgernent and common sense while operating, servicing, or working near the equipment.

NOTE:
SAFETY STATEMENTS ARE INCLUDED THROUGHOUT THE MANUAL WHERE IT MAY APPLY SPECIFICALLY TO INDIVIDUAL COMPONENTS OR ASSEMBLIES. FAILURE TO COMPLY WITH SAFETY WARNING CAN RESULT IN SERIOUS OR FATAL INJURY. IMPROPER OPERATION AND MAINTENANCE CAN CASUE SEVERE EQUIPMENT DAMAGE OR EXCESSIVE WEAR ON THE HAMMER AND HAMMER BIT.

- ☑ Be equipped with appropriate attire, hard hat, gloves, safety shoes, eye and ear protection. Don't wear loose clothing that could get caught in the equipment.
- ☑ Safety goggles or safety glasses are required. Rocks, dust, and loose particles from drilling may be blown into the as during drilling. Also, use safety glasses when sharpening bits.
- ☑ Handle all equipment with care.
- ☑ Operating the hammer at extreme pressures or speeds may cause failure or excessive wear. Please follow the instructions in the technical manual and use the recommended procedures for operation and maintenance of the hammer.

☑ Compressed air or fluid used for cleaning purposes should be utilized with extreme caution:

- Do not apply directly to your skin
- Do not use for cleaning directly from your clothing
- Do not direct it at another person
- Be careful not to blow directly into the equipment
- Wear safety glasses **AT ALL TIMES** of the operation

☑ Check the drill rod to power head spindle joint and make sure it is securely tightened before running the rotary head in reverse rotation. If you have a loose connection, it could result in the drill rod becoming disconnected cornpletely. If the drilling rod becomes disconnected, it could strike personnel.

☑ Be cautious about getting under the downhole hammer for inspedion. The downhole hammer could unexpectedly cycle, forcing the piston to drop out of the downhole hammer. This could cause bodily injury to anyone under the downhole hammer.

☑ When using solvents to clean parts, make sure that they are nonflammable, and that it meets current OSHA and International Standards; be sure to use the solvent in a well-ventilated area.

☑ Be sure all downhole hammer components are properly lubricated and maintained, while in storage. Failure to follow lubrication recommendations could cause damage and wear to the downhole hammer, its components, and /or personnel injury.

☑ Never heat up any parts of the hammer or weld on it. Use extreme care when breaking loose the top and bottom connections, using either a spanner wrench or a flat wrench that properly fits the driver and top sub.

Hammer View and Parts List

Bit Shank IR 112

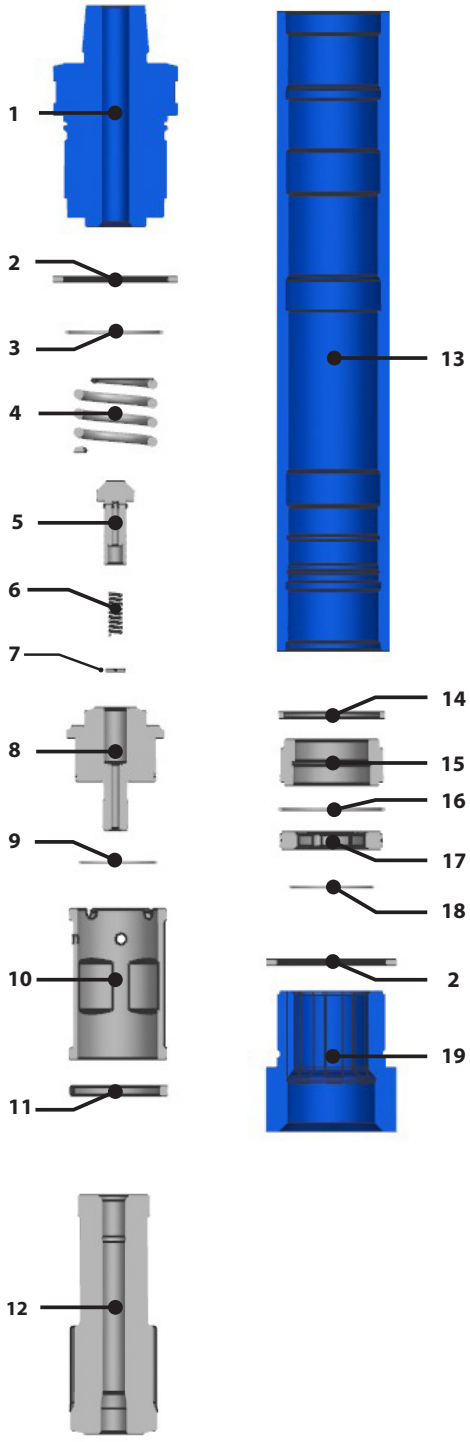

NO	Part Name	Qty	Part Number
1	Top Sub	1	HPDK-T14002
2	Wear Washer	2	HPDK-T14004
3	Top Sub O-Ring	1	HPDK-T14003
4	Spring	1	HPDK-T14006
5	Check Valve	1	HPDK-T14007
6	C.V. Spring	1	HPDK-T14009
7	Choke Set	1	HPDK-T14008
8	Air Distributor	1	HPDK-T14010
9	Air Dis. O-Ring	1	HPDK-T14011
10	Cylinder	1	HPDK-T14012
11	Cyl Ret Ring	1	HPDK-T14013
12	Piston	1	HPDK-T14014
13	Wear Sleeve	1	HPDK-T14001
14	Piston Ret. Ring	1	HPDK-T14017
15	Bearing	1	HPDK-T14020
16	Snap Ring	1	HPDK-T14021
17	Bit Ret.Ring	1	HPDK-T14018
18	Bit Ret.Ring O-Ring	1	HPDK-T14019
19	Drive Sub IR112	1	HPDK-T14022
	Sealkit (Items 3, 9, 18)	1	HPDK-T112SEALKIT
	Complete Hammer		HADK-T112

Dimensions & Weights	
Top Sub	6 ⅝" API REG PIN
Eff. Length (in / mm)	71.38 / 1813
OD Range (in / mm)	10.8 / 225
Piston Diameter (in / mm)	8.5 / 216
Stroke (in / mm)	2.5 / 63.5
Weight w/o bit (lbs / Kg)	1433 / 650
Piston Weight (lbs / Kg)	215 / 98

Bit Shank IR 112S

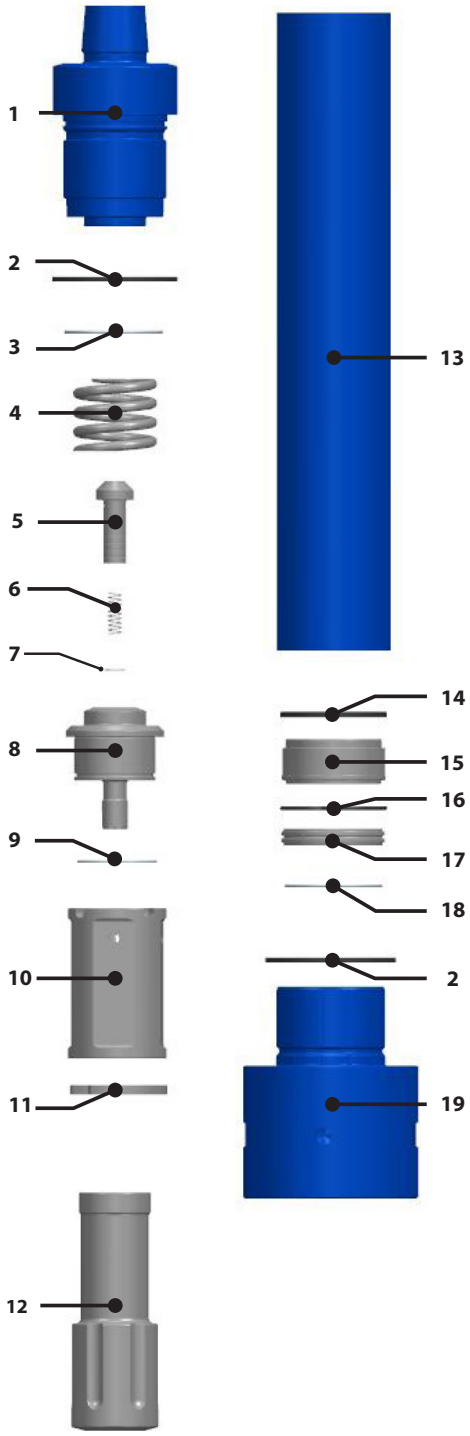

NO	Part Name	Qty	Part Number
1	Top Sub	1	HPDK-T14002
2	Wear Washer	2	HPDK-T14004
3	Top Sub O-Ring	1	HPDK-T14003
4	Spring	1	HPDK-T14006
5	Check Valve	1	HPDK-T14007
6	C.V. Spring	1	HPDK-T14009
7	Choke Set	1	HPDK-T14008
8	Air Distributor	1	HPDK-T14010
9	Air Dis. O-Ring	1	HPDK-T14011
10	Cylinder	1	HPDK-T14012
11	Cyl Ret Ring	1	HPDK-T14013
12	Piston	1	HPDK-T14014
13	Wear Sleeve	1	HPDK-T14001
14	Piston Ret. Ring	1	HPDK-T14017
15	Bearing	1	HPDK-T14020
16	Snap Ring	1	HPDK-T14021
17	Bit Ret.Ring	1	HPDK-T14018
18	Bit Ret.Ring O-Ring	1	HPDK-T14019
19	Drive Sub IR112S	1	HPDK-T14022-S
	Sealkit (Items 3, 9, 18)	1	HPDK-T112SEALKIT
	Complete Hammer		HADK-T112S

Dimensions & Weights	
Top Sub	6 5/8" API REG PIN
Eff. Length (in / mm)	77 / 1956
OD Range (in / mm)	10.8 / 274
Chuck OD (in / mm)	14.4 / 366
Stroke (in / mm)	2.5 / 63.5
Weight w/o bit (lbs / Kg)	1565 / 711
Piston Weight (lbs / Kg)	215 / 98

Bit Shank SD 12

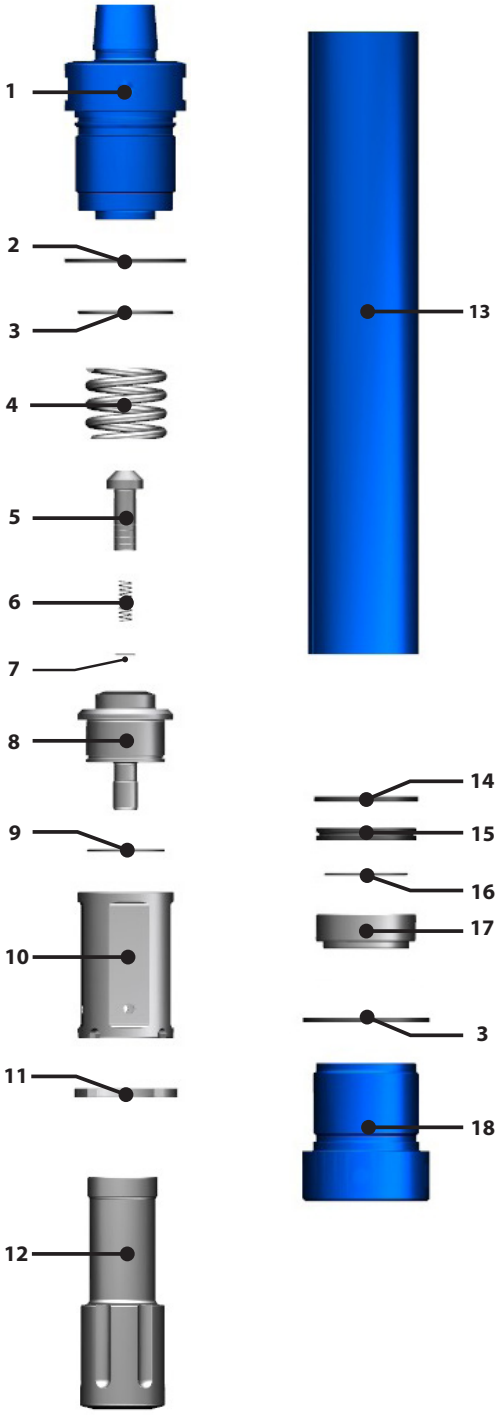

NO	Part Name	Qty	Part Number
1	Top Sub	1	HPDK-T12002
2	Top Sub O-Ring	1	HPDK-T12003
3	Wear Washer	2	HPDK-T12004
4	Spring	1	HPDK-T12006
5	Check Valve	1	HPDK-T12007
6	C.V. Spring	1	HPDK-T12009
7	Choke Set	1	HPDK-T12008
8	Air Distributor	1	HPDK-T12010
9	Air Dis. O-Ring	1	HPDK-T12011
10	Cylinder	1	HPDK-T12012
11	Cyl Ret Ring	1	HPDK-T12013
12	Piston	1	HPDK-T12014
13	Wear Sleeve	1	HPDK-T12001
14	Bit Ret. O-Ring	1	HPDK-T12019
15	Bit Ret. Ring	1	HPDK-T12018
16	Piston Ret. Ring	1	HPDK-T12017
17	Bearing	1	HPDK-T12020
18	Drive Sub	1	HPDK-T12022
	Sealkit (Items 2, 9, 14)	1	HPDK-T120SSEALKIT
	Complete Hammer		HADK-T120S

Dimensions & Weights	
Top Sub	6 ⅝" API REG PIN
Eff. Length (in / mm)	70.31 / 1785.87
OD Range (in / mm)	10.8 / 274
Stroke (in / mm)	2.5 / 63.5
Weight w/o bit (lbs / Kg)	1433 / 650
Piston Weight (lbs / Kg)	264 / 120

Clamping Locations

HAMMER	LOCATION FROM TOP SUB END OF WEAR SLEEVE "A"	LENGTH OF GRIP AREA "B"	LOCATION FROM DRIVER SUB END OF WEAR SLEEVE "C"	LENGTH OF GRIP AREA "D"
IR3.5	3	4	3	4
IR340	4	4	4	4
QL40	4	4	4	4
SD4	4	4	4	4
IR350	6	4	5	4
QL50	6	4	5	4
SD5	6	4	5	4
IR360	4.5	4	5	4
QL60	4.5	4	4.5	4
SD6	4.5	4	5.5	4
IR380	6.5	4	6	4
QL80	6.5	4	6	4
SD8	6.5	4	6	4
SD10	8	6	6.5	6
IR112	9.5	6	7	6
QL120	9.5	6	7.5	6
SD12	9.5	6	8	6
SD15	9.5	6	8.5	6

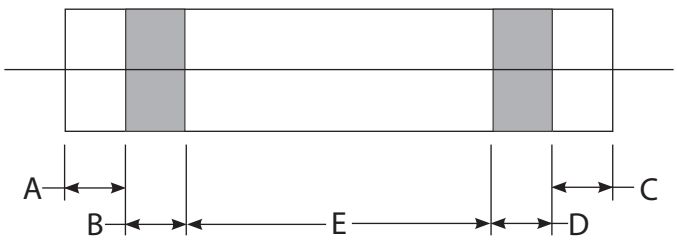

DO NOT USE TONGS
IN AREAS A, C AND E

DK 112 Hammer Air Consumption at Different Working Pressure

PSI	BAR	CFM	CuMtr/Min
150	10.3	880	24.9
200	13.8	1250	35.4
250	17.2	1700	48.1

In difficult drilling conditions, extra flushing can be obtained by changing the choke in the check valve. This might be desirable, e.g. when there is a large influx of water into the hole, when there is a big difference between the diameter of the drill bit and the diameter of the drill pipes, or when penetration rates are abnormally high.

Friction between the drill pipes and the hole wall can sometimes reduce the penetration rate. Increasing the air pressure to give more impact power and faster penetration can often counteract this.

DK 112 Hammer Assembly

The DK 112 Hammer assembly process is identical to the disassembly process yet in reverse.

The following guideline should be used;

- All parts should be clean and free of grit, dirt, and other foreign material.
- All nicks and burrs on parts should be removed.
- All parts should be coated with rock drill oil & threads with thread grease and preferably the same type to be used on the drilling rig.
- All damaged 0-rings' should be replaced. All seals should be oiled or greased to avoid cutting or tearing.
- Make sure the threads are clean and dry, and that sufficient drying time is allowed.

Assembly with Shank type IR112

1. Slide the ***Cylinder Retainer Ring*** (Part No. 13) into the ***Case*** (Part No. 1) (You may use a rod to fit the Cylinder Retainer Ring at the groove well. (Upper -> Lower)

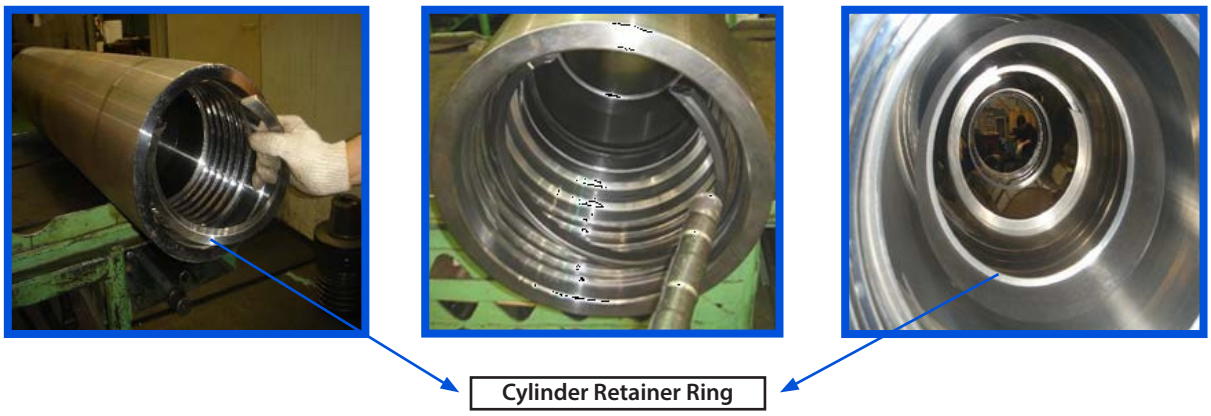

2. Install ***Piston*** (Part No. 14) into the ***Case*** (Part No. 1) (Lower -> Upper)

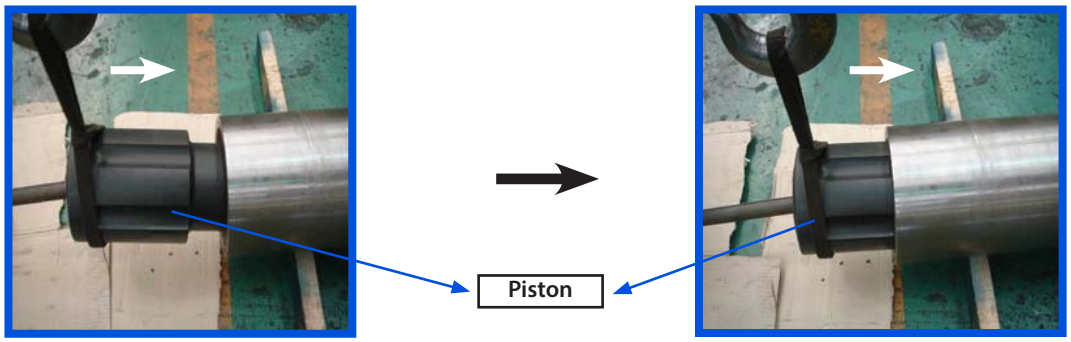

3. Insert ***Retainer Ring*** (Part No. 17) at the second groove into the ***Case*** (Part No. 1). (Lower -> Upper)

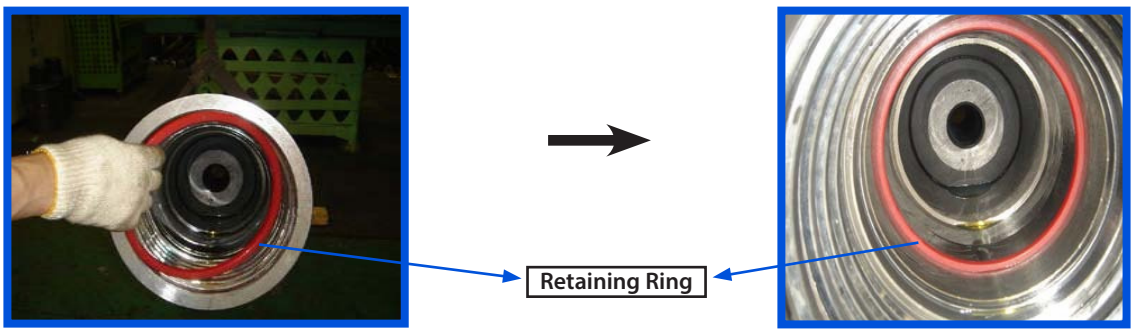

4. Slide ***Bearing*** (Part No. 20) into the ***Case*** (Part No. 1) (Lower ->Upper)

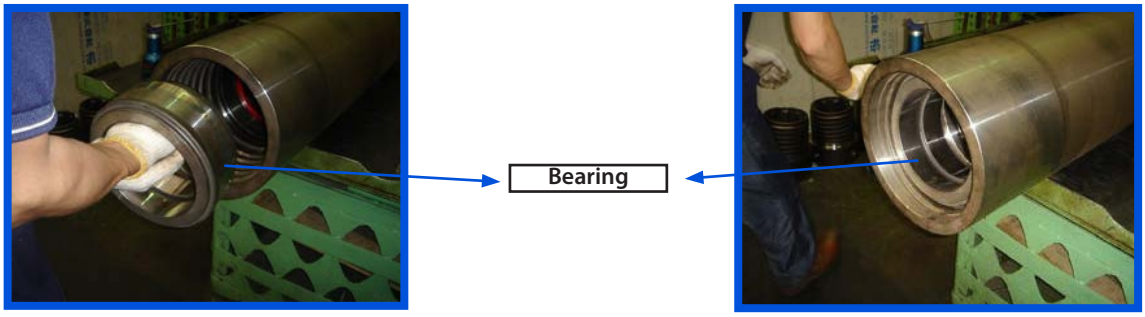

5. Put ***Bearing Retainer Ring*** (Part No. 21) into the ***Case*** (Part No. 1)

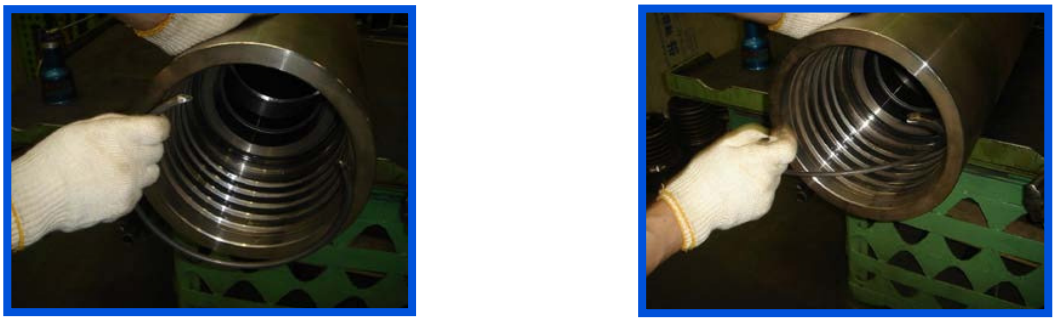

6. Place an ***O-Ring*** (Part No. 19) in the center groove of the ***Bit Retainer Ring*** (Part No. 18). Place the ***Bit Retainer Ring*** (Part No. 18) with the ***O-Ring*** into the ***Case*** (Part No. 1) (Lower -> Upper)



7. Put the ***Washer*** (Part No. 4) into the ***Drive Chuck*** (Part No. 22)



8. Screw the ***Chuck*** (Part No. 22) into the ***Case*** (part no. 1) Matching screw line tightly.



9. Put the ***O-Ring*** (Part No. 11) at the groove around the ***Air Distributor*** (Part No. 10) and then place ***Air Distributor*** + ***O-Ring*** into the ***Cylinder*** (Part No. 12). Use rubber hammer for stronger connection.



10. Put the assembled ***Cylinder*** (Part No. 12) into the ***Case*** (Part No. 1) (Upper -> Lower)

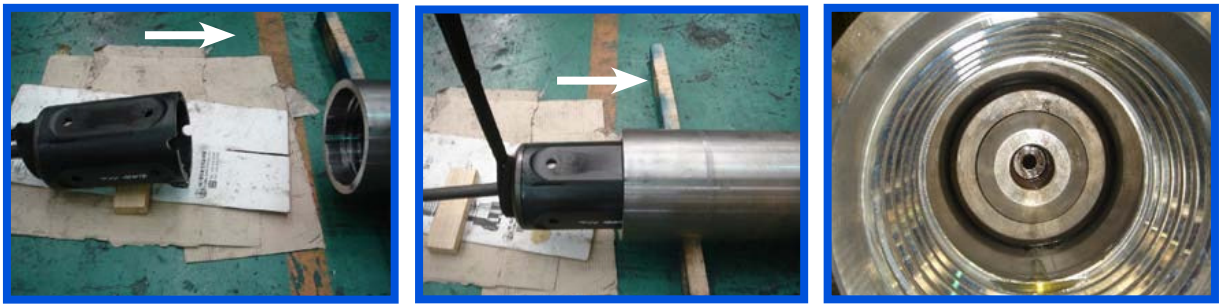

11. Put ***Spring*** (Part No. 6) into the ***Case*** (Upper -> Lower)



12. Insert the ***Check Valve Spring*** (Part No. 9) into the ***Check Valve*** (Part No. 7) with a ***Choke*** (Part No. 8) and put them into the center hole in the ***Case***. (Upper -> Lower)



13. Put the ***Washer*** (Part No. 4) on the ***Top Sub*** (Part No. 2) & fix the ***O-Ring*** (Part No. 3) on the ***Top Sub*** as shown.

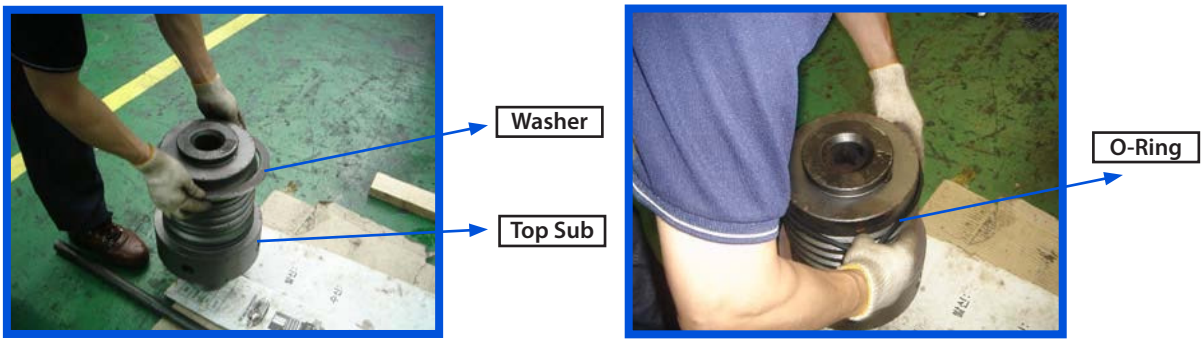

14. Put the ***Top Sub*** (Part No. 2) with the ***Washer*** & ***O-Ring*** into the top end of the ***Case*** (Part No. 1)



15. The Completed Assembly of DK112 Hammer



Assembly with Bit

1. Loosen the ***Drive Chuck*** (Part No. 22) with the ***Washer*** (Part No. 4) from the bottom end of the ***Case***. (Part No. 1)

2. Put the ***Drive Chuck*** with the ***Washer*** onto the ***Bit***.

3. Fix the ***Bit Retainer Ring*** (Part No. 18) on the upper groove of the ***Bit***





4. Screw the assembled ***Drive Chuck*** (Part No. 22) with the ***Bit*** into the ***Case*** (Part No. 1)




Assembly with Shank type SD12

***The bottom portion of the Case with the Shank type SD12 (Refer to SD12 View & Parts List)**
(After installation of cylinder retaining ring and piston, follow these steps.)

1. Insert ***Retainer Ring*** (Part No. 17) at the second groove into the ***Case*** (Part No. 1). (Lower -> Upper)

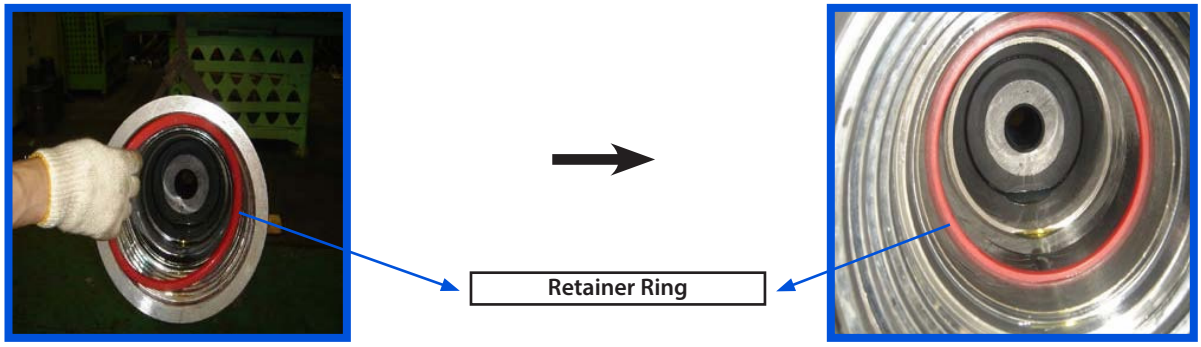

2. Place an ***O-Ring*** (Part No. 19) in the center groove of the ***Bit Retainer Ring*** (Part No. 18). Place the ***Bit Retainer Ring*** (Part No. 18) with the ***O-Ring*** into the ***Case*** (Part No. 1) (Lower -> Upper)



3. Slide ***Bearing*** (Part No. 20) into the ***Case*** (Part No. 1) (Lower -> Upper).

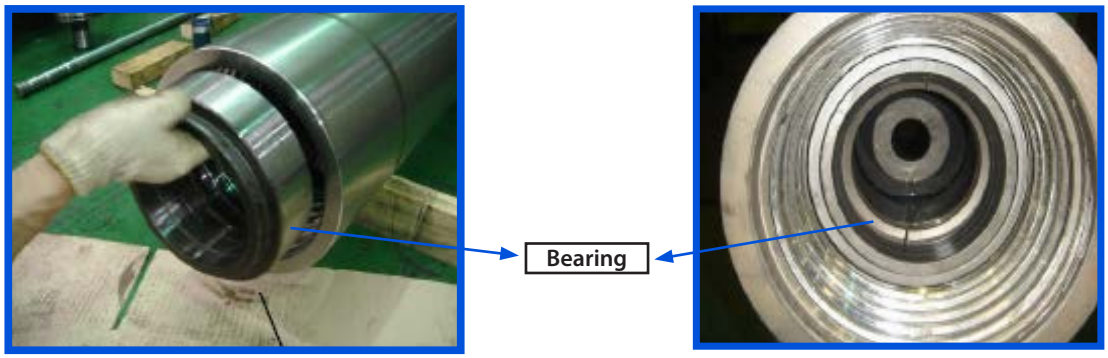

4. Put the ***Washer*** (Part No. 4) into the ***Drive Chuck*** (Part No. 22)





5. Screw the ***Chuck*** (Part No. 22) into the ***Case*** (part no. 1) Matching screw line tightly.
   For DHD 112S reference (TEXT)







***Assembly processing of the upper Case with Shank Type SD12 is the same assembly with Shank Type DHD112. Refer to Step 9 on page 13.**

Assembly with Bit

1. Loosen the ***Drive Chuck*** (Part No. 22) with the ***Washer*** from the bottom end of the ***Case***. (Part No. 1)

2. Loosen the ***Bearing*** (Part No. 20) and ***Bit Retainer Ring*** (Part No. 18) with ***O-Ring*** (Part No. 19) from the bottom end of the ***Case***.



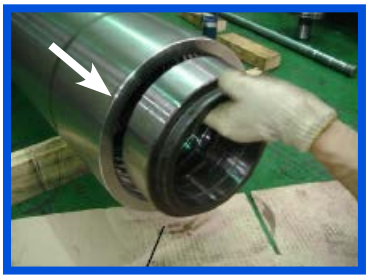



3. Put the ***Drive Chuck*** with the ***Washer*** onto the ***Bit*** and then put the ***Bearing*** (Part No. 20) onto the bit.

4. Fix the ***Bit Retainer Ring*** (Part No. 18) in the upper groove of the ***Bit.***





5. Screw the assembled ***Drive Chuck*** (Part No. 22) with the ***Bit*** into the ***Case*** (Part No. 1)





Lubrication

In order to maintain satisfactory operation of the Drill King Hammers, you must lubricate the hammer properly. The recommended lubricant to use with Drill King Hammers is the Biodegradable and Environmentally Friendly **Rock Drill Oil (Part Number DKRDO-5G).**

- Check the oil level in the lubricating tank
- Check for oil in the compressed air.
- Mineral oils have the best lubricating properties
- Lubricating out used in water well drilling should be non-toxic.

You can make sure the lubricant is being carried to the hammer via the compressed at by placing a plank over the drill steel support and letting the operating air blow over the plank. If you see that it is oily then the oil should be getting to the hammer. It is also essential to the life of the hammer components.

Proper thread lubricants are also critical to the life of the hammer components. Thread lubrication applied to the stress relief grooves at the base pin will help fight the effects of corrosive drilling fluids.

It is a necessary procedure to reapply thread lubricant (Drill King Copper Cote Part No. 630010 1-gal) to the driver sub threads when changing bits. It is also important that the drive sub and the top sub threads be recoated with thread lubricant often in order to assure the maximum protection from corrosion pitting.

Corrosion failures in percussion hammers and hammers bits can be controlled by maintaining a protective barrier between the bit and hammer parts and the environment through proper application of readily available rock drill oils and thread lubricants.

The best method for preventing failures due to corrosion fatigue is to be sure the surface of the bits and components of the hammer is coated with rock drill oil. Threaded connections and thread run out grooves should be protected by coating with thread lubricant. When using water injection, solvable rock drill oil with a higher viscosity rating should utilized.

Storage

When storing Drill Hammers, it is important to blow the hammer clear of all water. After disassembling the hammer, all internal parts are liberally coated with rock drill oil. Store the hammer horizontally in a clean dry place.

Warranty

NOTICE TO CUSTOMER: READ CAREFULLY, THESE TERMS AND CONDITIONS CONTAIN DISCLAIMERS OF WARRANTIES AND STRICT LIMITATIONS OF LIABILITIES AND REMEDIES. NO WARRANTY IS TRANSFERRABLE WITHOUT THE EXPRESS PERMISSION OF DRILL KING INTERNATIONAL.

Drill King International LP warrants to the original purchaser that its products are free from defects in material and workmanship for a period of:

- ☑ Percussion Bits — One year from the date of purchase.
- ☑ DTH Hammers — Six months from the date of purchase.
- ☑ WAI Hammers — Three months from the date of purchase.

Claims of defects in material and workmanship are subject to review and physical inspection of the returned product. Failure of the purchaser to provide relevant operational details to assist in the investigation will result in the denial of the claim. Until resolution, the purchaser must retain and appropriately store the claim. part. Upon request, the claimed part must be sent to Drill King for assessment. Any part or product sent to Drill King must be accompanied with a "Return Authorization Form" issued, in advance, by the Sales Department at Drill King. All return packaging must clearly be marked with the return authorization number. Freight for the return must be pre-paid by the purchaser. Failure to abide by these instructions will result in refusal to accept the returned product at the Drill King facility.

To begin a warranty claim a 'Product Evaluation Report' must be fully completed and submitted within the above mentioned time frame or warranty life

The report must be completed and submitted within (14) days of either the time of discovery of defect or when reasonable discovery of defect should have been made. Warranty Claims will only be accepted on products still within their warranty life.

Drill King International expressly excludes the following from the terms of this warranty:

- ☑ Incidental or consequential damages connected with the use of their products
- ☑ Claims of parts issued under concession.
- ☑ Claims of lost time
- ☑ Performance outside of the standard scope provided by Drill King International
- ☑ Effects of corrosion and/or normal wear
- ☑ Hammer seals and/or items intended to wear
- ☑ Any part that shows evidence of improper application
- ☑ Fitness for use other than the intended purposes of the product
- ☑ Proprietary design where the design control is retained by the customer, particularly when design parameters are outside Drill King Internationals recommended specifications (E.X. Oversized bits or hole openers.)
- ☑ Evidence of abuse, localized heating, welding, galling, corrosion, inadequate lubrication, physical alteration, wrench marks, lack of proper maintenance, operating outside recommended specifications, bending or otherwise distorting, excessive wear, improper storage or transportation, and chipped or crushed carbides must result in denial of claims
- ☑ Damage caused as a result of using incorrect servicing tools or procedures
- ☑ Evidence from wear shows the product has achieved at least 7596 of its expected life.
- ☑ Any part that is described as "No Warranty" in the quote, order acknowledgement, order, packing list, or invoice
- ☑ Special warranties described in the quote, order acknowledgement, order, packing list, or invoice

Conclusion

In the event of finding a defective product, a full or pro-rated credit will be issued provided that the end user has demonstrated that the product has been stored, installed, maintained and operated in an acceptable manner.

Drill King International will not accept any remedies to the user other than those set out under the provisions of the warranty above. **Drill King international will only ever be liable for damages that are liquidated and set at the original purchase price for any said item or part in dispute**



CONTACT US

Phone: 1-817-539-2500
Fax: 1-817-453-1263
Toll Free: 1-866-900-BITS (2487)
Email: sales@drillking.com
Skype ID: drill.king

Drill King International
820 S 6th Ave, Mansfield, TX 76063, USA.

drillking.com